MicroCentric

Specifications

Chuck Model	Spindle Nose	Collet Model	Accuracy Max Radial Runout	Collet Capacity	Collet Clamp Range	Chuck Stroke Linear	Max Draw Tube Force	Max Clamping Force	Max Speed	Chuck Weight
CB65-NX/A5	A2-5	65BZI	.0004"	2.625"	+/- .020"	.160"	10,116 lbs	23,605 lbs	6,000 rpm	25.9 lbs
			0.010mm	66mm	0.5mm	4mm	45 kN	105 kN		11.8 kg

Dimensions

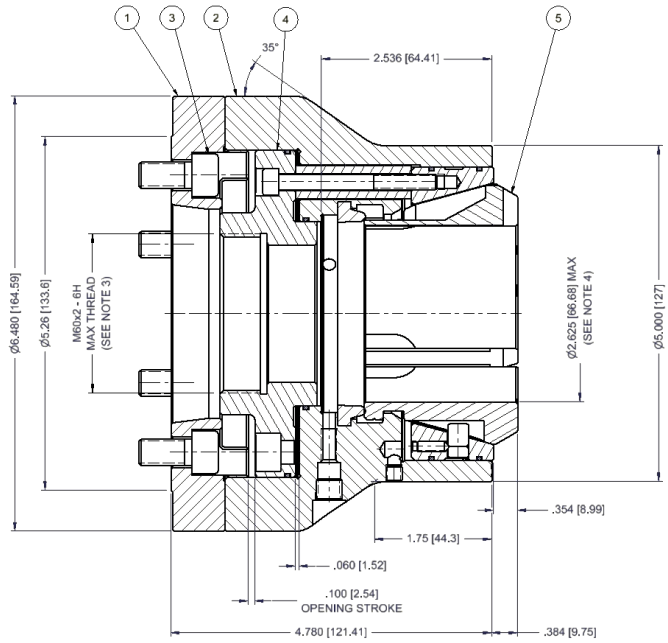

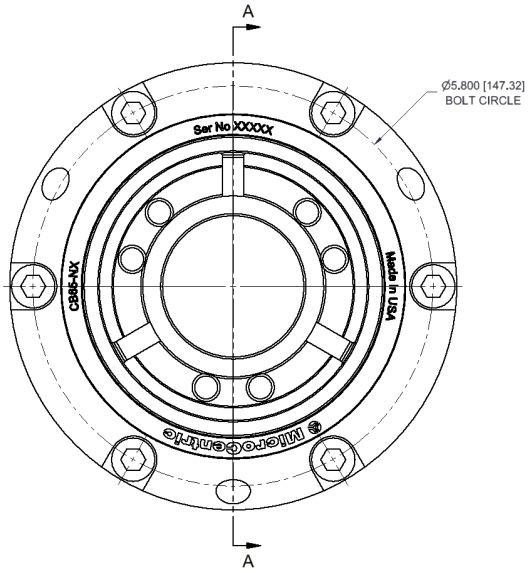

ITEM	QTY	PART NUMBER	DESCRIPTION
1	1	16 065 205	ADAPTER
2	1	16 065 537	FITTED BODY AND SLEEVE
3	6	83 193 M020	M10 x 20 SHCS
4	1	SEE NOTE 3	DRAW TUBE CONNECTOR
5	1	SEE NOTE 4	COLLET

NOTES

1. DIMENSIONS SHOWS ARE FOR REFERENCE ONLY
2. THE CHUCK IS SHOWN IN THE NOMINAL CLAMPED POSITION.
3. DRAW TUBE CONNECTOR AND THREAD PER CUSTOMER REQUIREMENTS.
4. THE CHUCK IS SHOWN WITH THE MAX COLLET BORE.